TYPE 2 - 725 SERIES (7-1/4" THROAT) W/ 2" FLUSH TRIM
GLASS JAMB HEADER

J

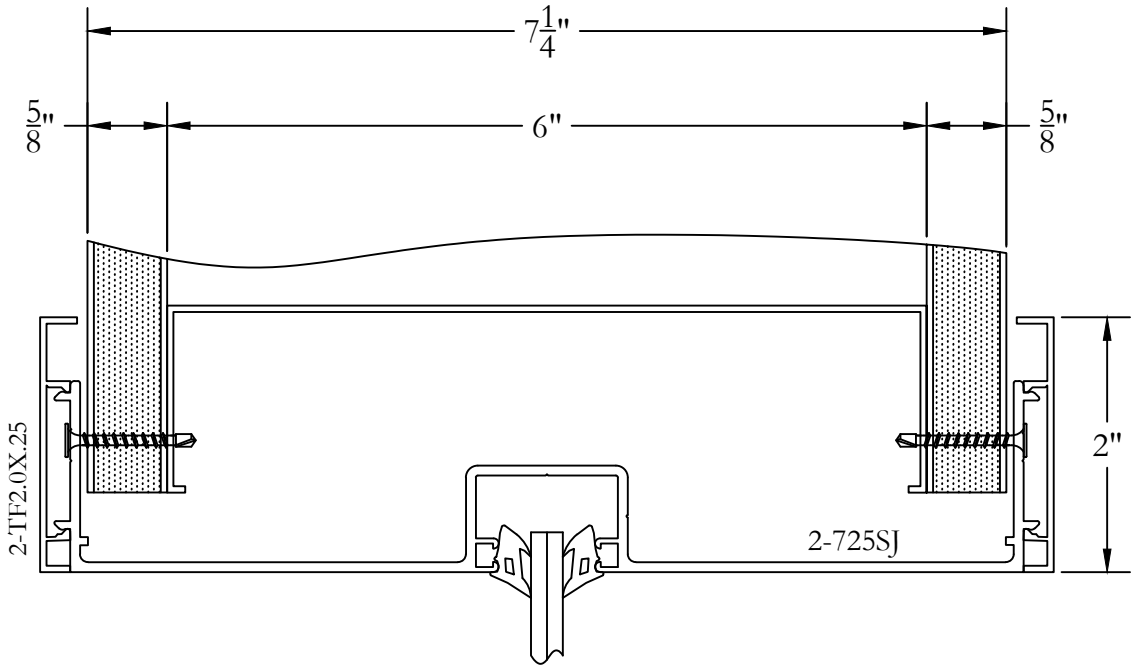

Bringing new light to interior achitecture

FRAMEWORKS

Frameworks Manufacturing
1910 Cypress Station Dr
Suite #100
Houston, Texas 77090

Phone: 713-692-5222
www.frameworks.com
email: orders@frameworks.com